THE INFORMATION CONTAINED IN THIS DRAWING IS THE SOLE PROPERTY OF NC STATE UNIVERSITY. ANY REPRODUCTION IN PART OR WHOLE WITHOUT THE WRITTEN PERMISSION OF NC STATE UNIVERSITY IS PROHIBITED.
FILE: Drone Blades

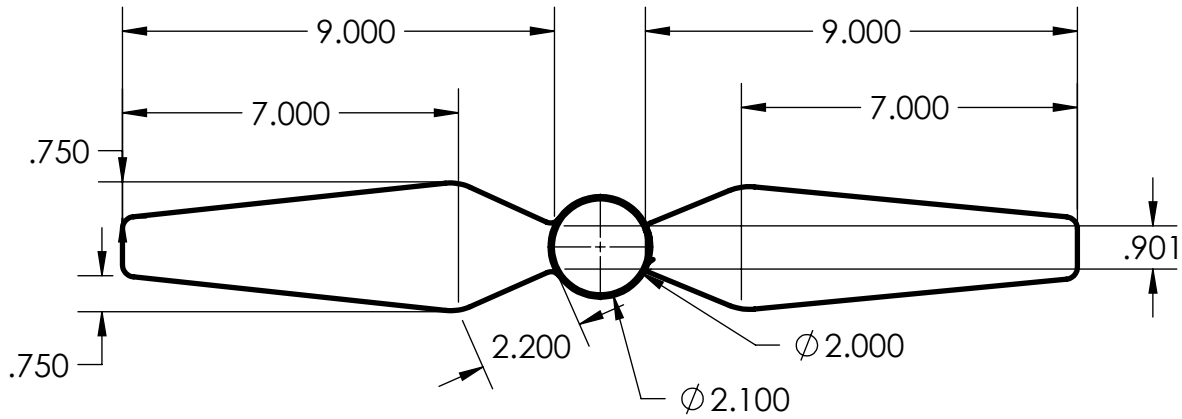

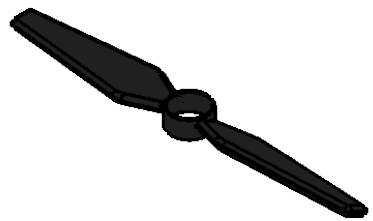

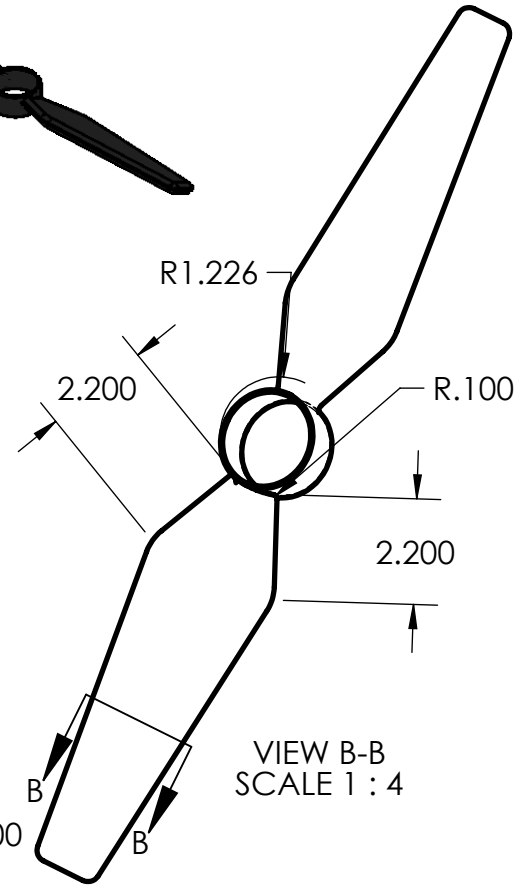

VIEW B-B
SCALE 1 : 4

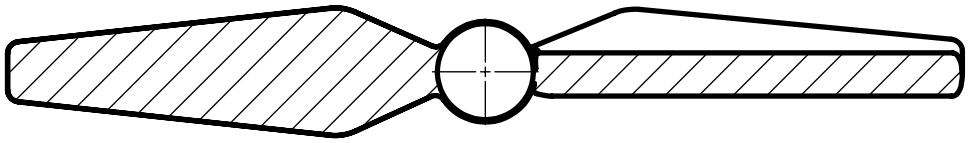

SECTION C-C
SCALE 1 : 4

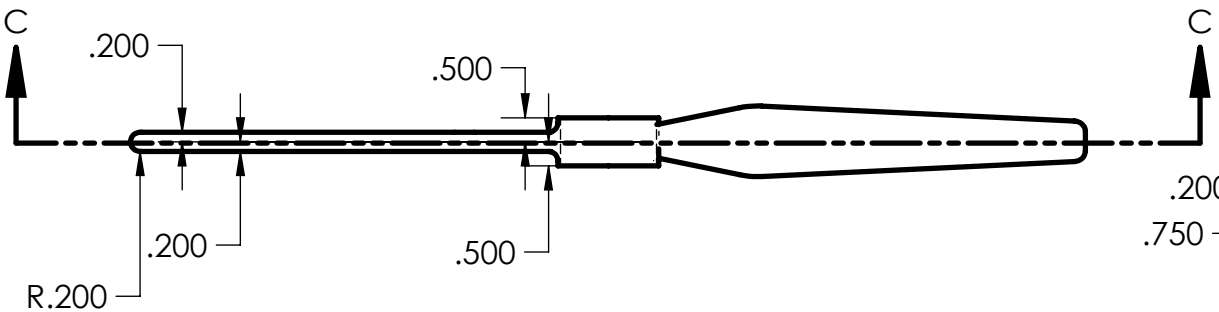

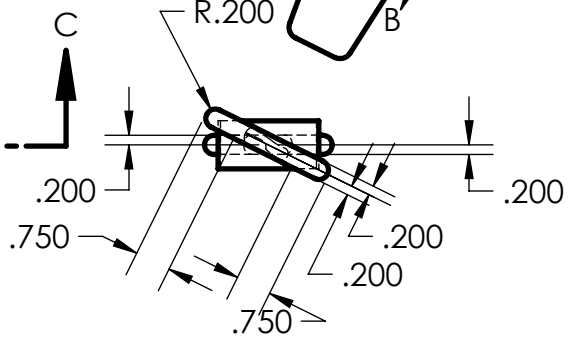

NORTH CAROLINA STATE UNIVERSITY P.O. BOX 7801 Raleigh, North Carolina	UNLESS OTHERWISE SPECIFIED DIMENSIONS ARE IN INCHES TOLERANCES ARE: FRACTIONS + DECIMALS .XX+ .XXX+.XXX ANGLES + 1	DRAWN CRAIG MORTON	DATE 4/25/2018	TITLE DRONE BLADES
		MATERIAL CARBON FIBER	SCALE 1:4	SIZE A / PRT. NO. SHEET 2 OF 6 / # 1